QJ241 MOBILE JAW CRUSHER
FEATURES & BENEFITS

Rev 1 23-12-14

Hopper

Feeder

Crusher

Main conveyor

Controls

Engine

Tracks

Dimensions

Options

Benefits overview

QJ241

HOPPER DOORS

- 1840mm x 3770mm / 6’ x 12’ 4½”
- Level hopper capacity 2.8m³/ 3.7yds³
- Heaped hopper capacity 4.95m³ / 6.5yd³
- Rear loading height 3568mm / 11’ 8½”
- Reinforced 10mm / ⅜” hopper complete with 10mm / ⅜” liner plates
- Hydraulically folding
- Enables a quick set-up time
- Reinforced hopper sides with retaining wedges

SANDVIK

QJ241

FEEDER

- Double stepped cassette style vibrating grizzly feeder 800 x 3580mm / 31½” x 11’ 9”
- 1260mm / 49½” long grizzly cassette taper ends into the crusher
- 35 – 70mm / 1⅜ - 2¾” aperture taper on the grizzly
- High stroke and fully variable speed controlled
- Driven from flange mounted hydraulic motor
- Underside of feeder contains a heavy duty ribbed frame
- Feeder control is automatic via the engine load control system to ensure continuous, uninterrupted crushing.

QJ241

JAW CRUSHER

- C10 single toggle jaw crusher
- 1000 x 650mm / 40” x 26” feed opening
- Optimum feed size < 520mm³ / 21 inch³
- Up to 225 tph / 248 stph
- Minimum CSS (closed side setting) 50mm / 2” on all applications, up to a maximum of 150mm / 6”
- Unique 320rpm crusher speed
- Able to be run in reverse or ‘jogged’ to assist with clearing blockages in the chamber

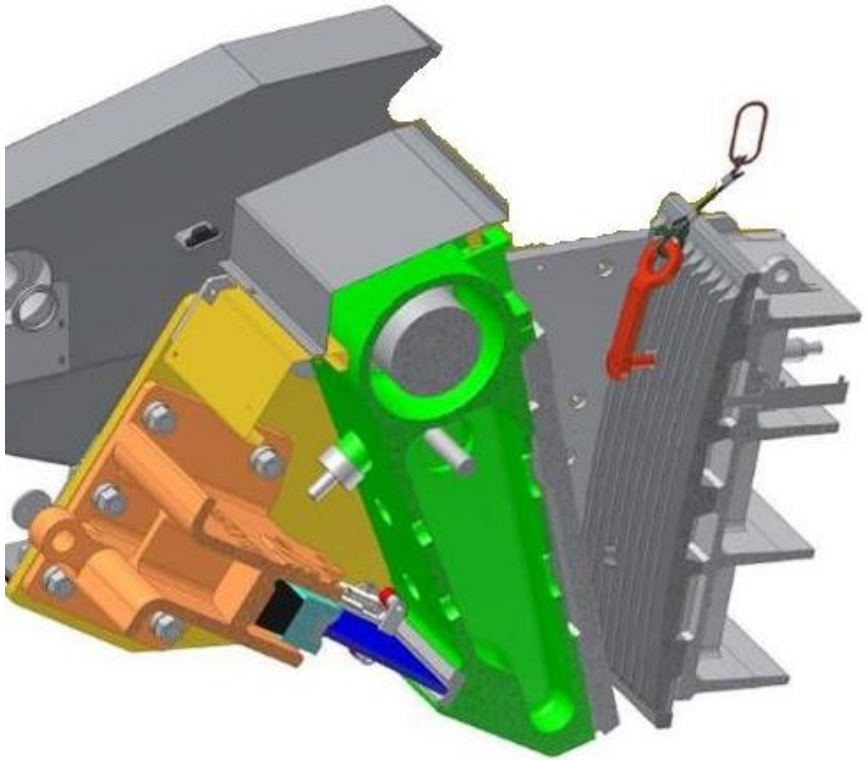

QJ241

JAW CRUSHER MAINFRAME

- The crusher mainframe comprises of the following:
  - Two high quality rolled steel side plates
  - Heavy duty cast steel front and rear beam

- These are bolted and torqued together forming a tough, robust mainframe capable of withstanding arduous working conditions.

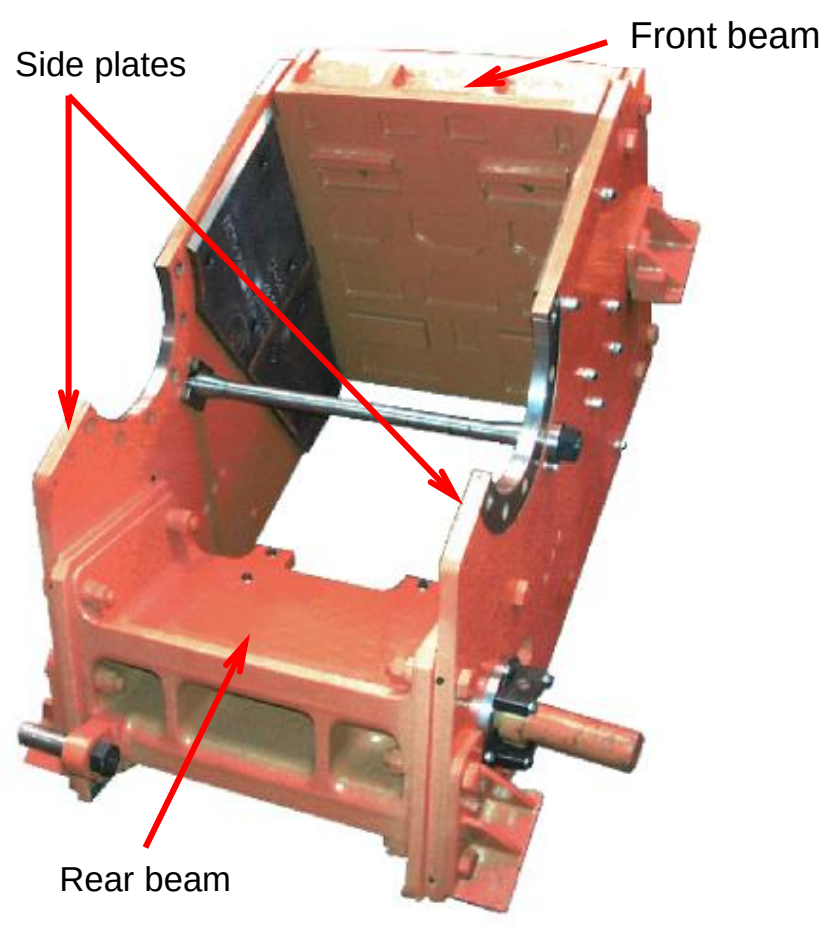

QJ241

JAW PROTECTION GRID

- Jaw protection grid fitted as standard
- Protects the machine if the jaw crusher tries to eject material

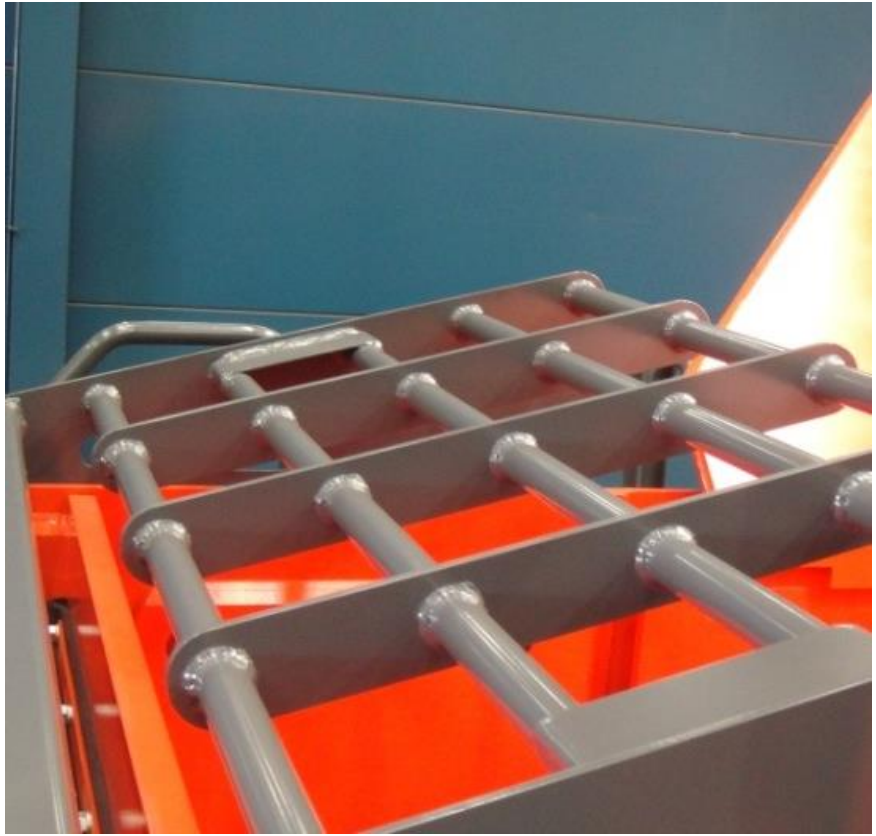

QJ241

JAW STOCK

- The jaw stock is comprised of the following:
  - Heavy duty cast jaw stock to withstand arduous working conditions
  - Manganese jaw plate
  - Swing jaw wedges
  - Live jaw stock protection plate shields the jaw stock from damage and assists the material into the crushing chamber

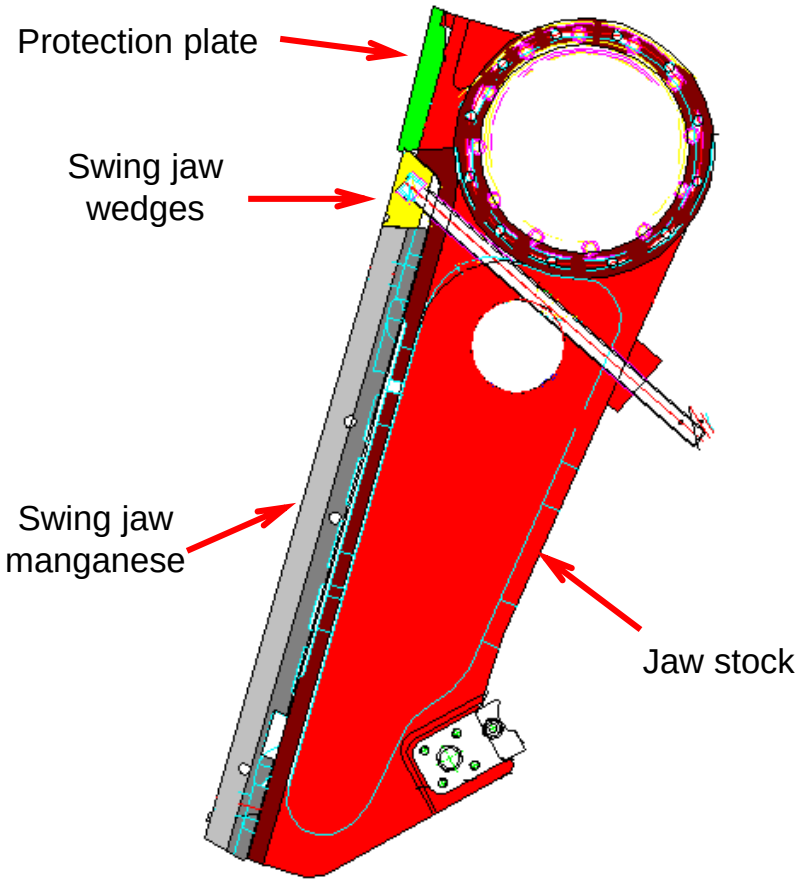

QJ241

JAW IN

- The first function is to open the full bore side of the clamping cylinders to tank
- The adjustment wedge is driven in on the full bore side into the crusher thus reducing the CSS
- Once the correct CSS is achieved all of the cylinders are then charged on the respective sides to clamp everything into place

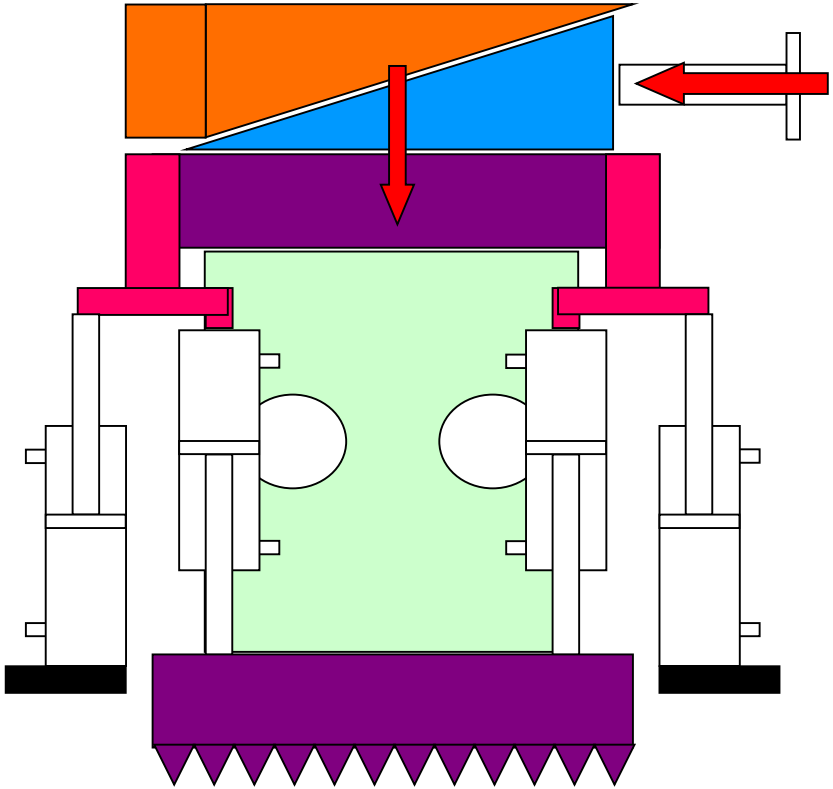

QJ241

JAW OUT

- When jaw out is pressed the clamping cylinders annulus side is opened to tank
- The adjustment wedge is then pressurised on the annulus side which pulls the wedge out thus increasing the CSS
- Once the correct CSS is achieved all of the cylinders are then charged on the respective sides to clamp everything into place

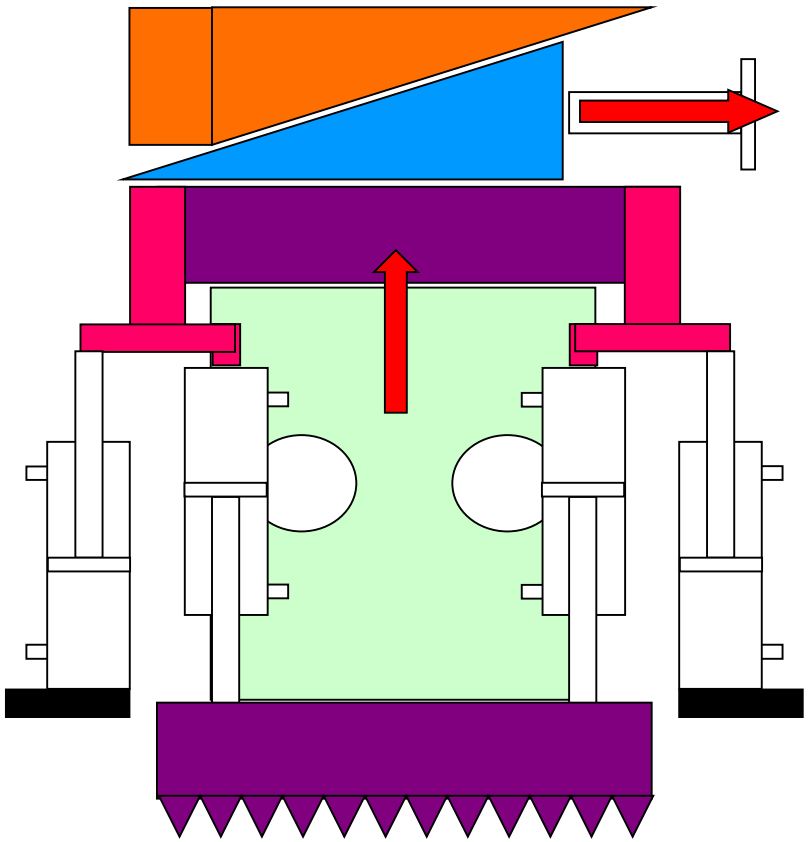

QJ241

FIXED JAW PLATE

- The fixed jaw has a unique concealed wedge and removal cylinder design
- This stops the fixed jaw wedges from becoming distorted during crushing which can happen with other crusher manufacturers

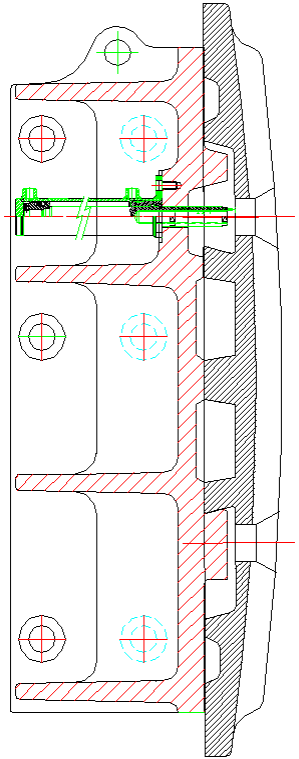

QJ241

BY-PASS CHUTE

- By-pass chute to take the natural fines out of the feed material and bypass the jaw crusher
- Two way door for diverting the material either onto the main conveyor or optional natural fines conveyor

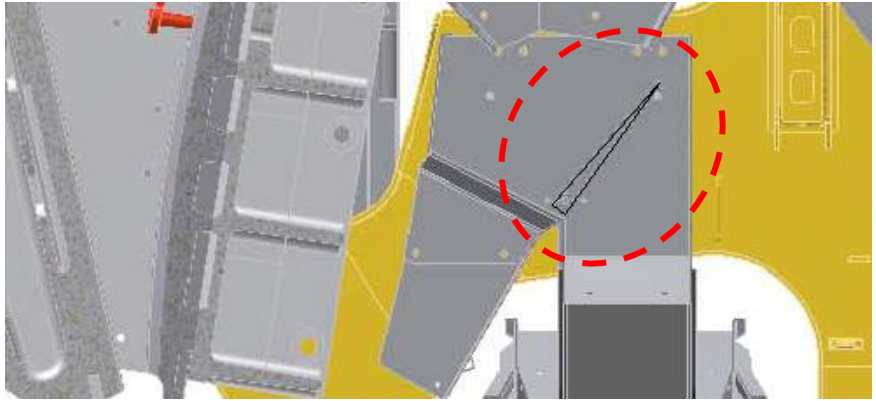

QJ241

CSS ADJUSTMENT SYSTEM

- Fully adjustable hydraulic system for CSS adjustment
- The adjustment wedge is driven in reducing the CSS by sliding against the cast cross beam wedge

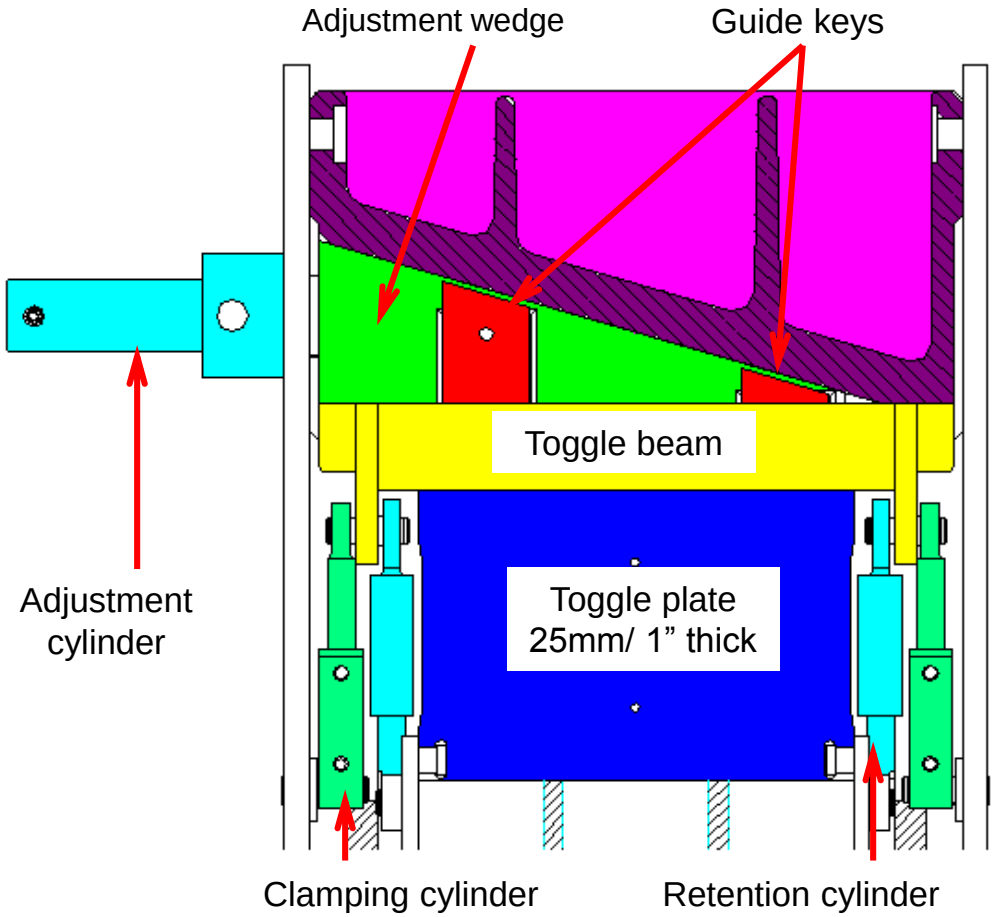

QJ241

CHEEK PLATES

- Upper and lower cheek plates to protect the crusher side walls
- Wear resistant steel, lower cheek plates

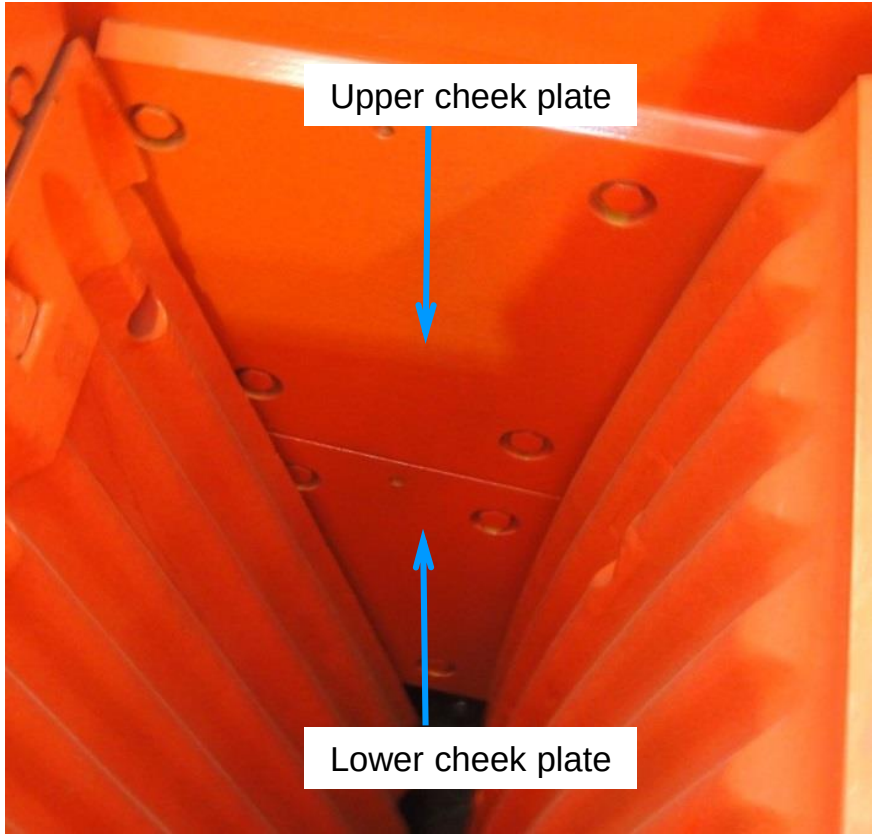

QJ241

JAW CRUSHER

- Unrestricted feed opening and excellent crushing geometry enables the crusher to take ‘slabby’ feeds
- “Live” crushing section with replaceable wear plate at the top of the jaw to encourage material into the chamber

QJ241

JAW PLATES

- The QJ241 crusher is fitted with 13% Mn corrugated jaw plates as standard.
- This is the tried and tested profile which has worked well in a wide range of applications over many years.

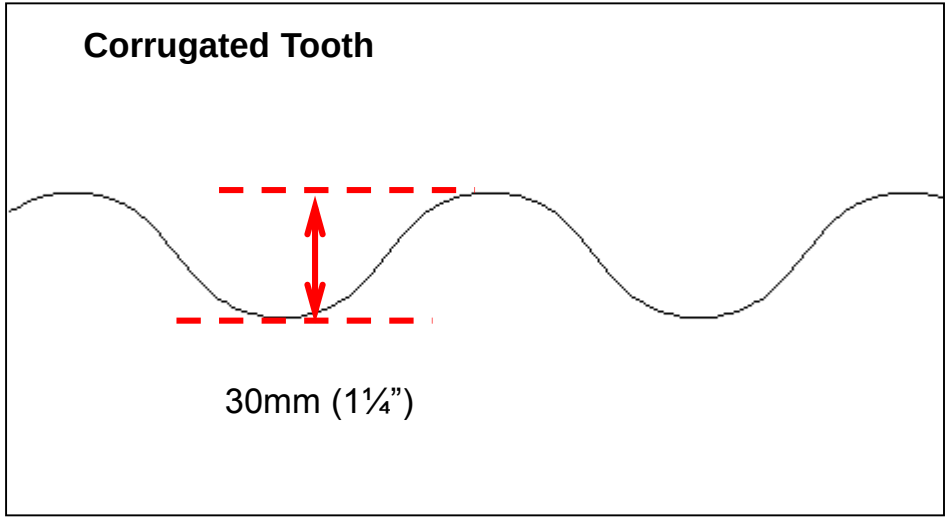

QJ241

JAW MAIN BEARINGS

- The QJ241 shaft assembly comprises of four heavy duty roller bearings that are greased automatically by the Vogel greasing system
- The greasing system also services the bearings on the torque arm crusher drive

Vogel greasing system

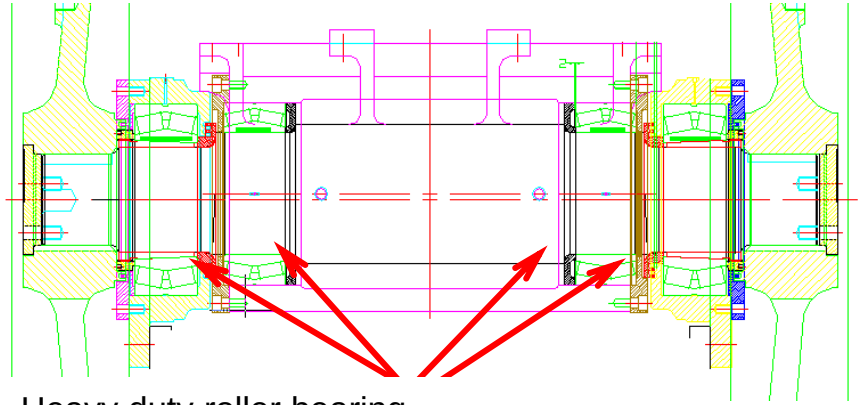

Heavy duty roller bearing

QJ241

CRUSHER DRIVE

- The jaw crusher is hydrostatically driven by a large Danfoss motor mounted on the crusher mainframe
- Drive via a flexible coupling to reduce shock loads
- Short “V” belts eliminate belt slip and flapping
- Quick easy belt tensioning negates the need for moving the engine

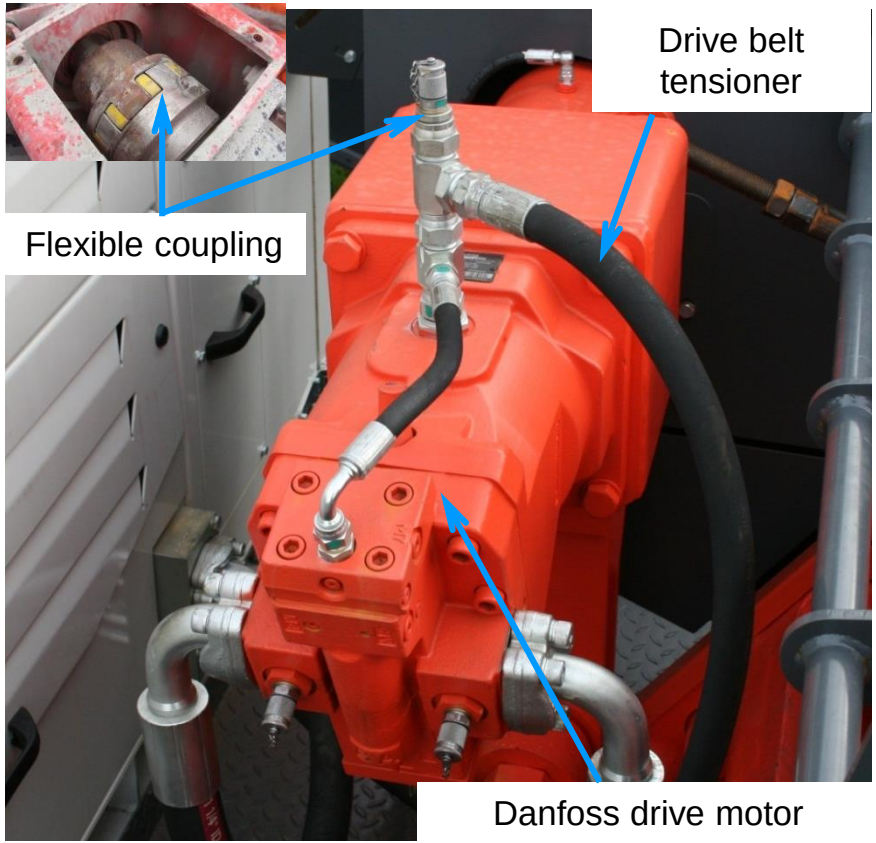

QJ241

JAW SUPPORTS

- The crusher is mounted independently from the chassis on four anti-vibration mounts
- These absorb the crushing vibrations and stop any stress travelling through the main chassis

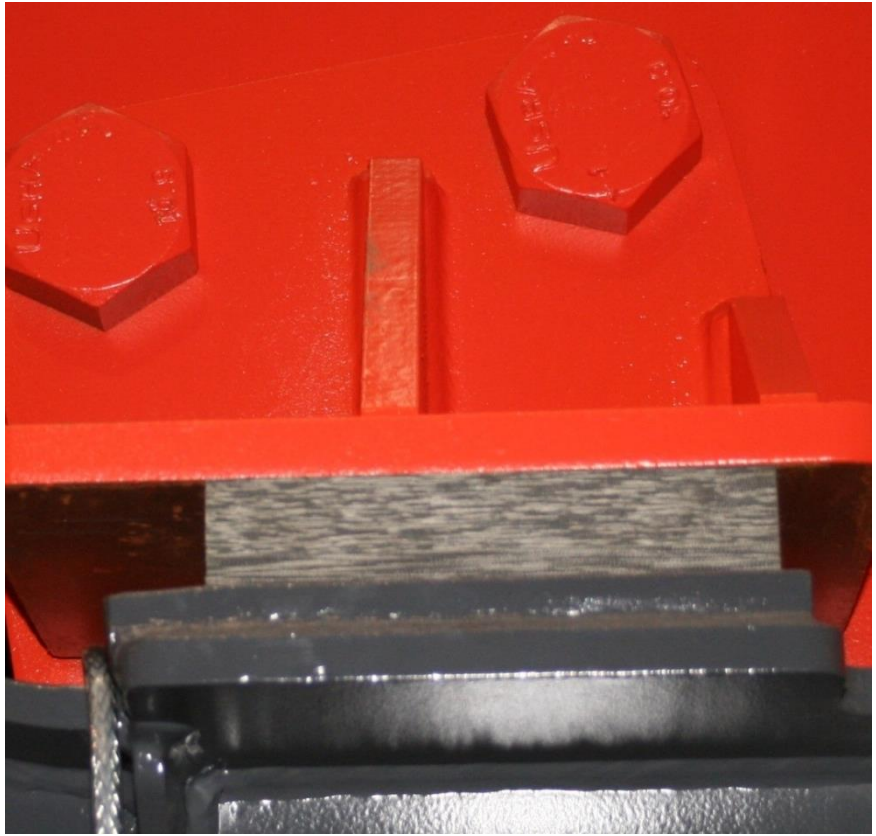

QJ241

ACCESS

- Walkway access around the crusher
- Folding angled ladders fitted as standard
- Provides a safe working area during maintenance

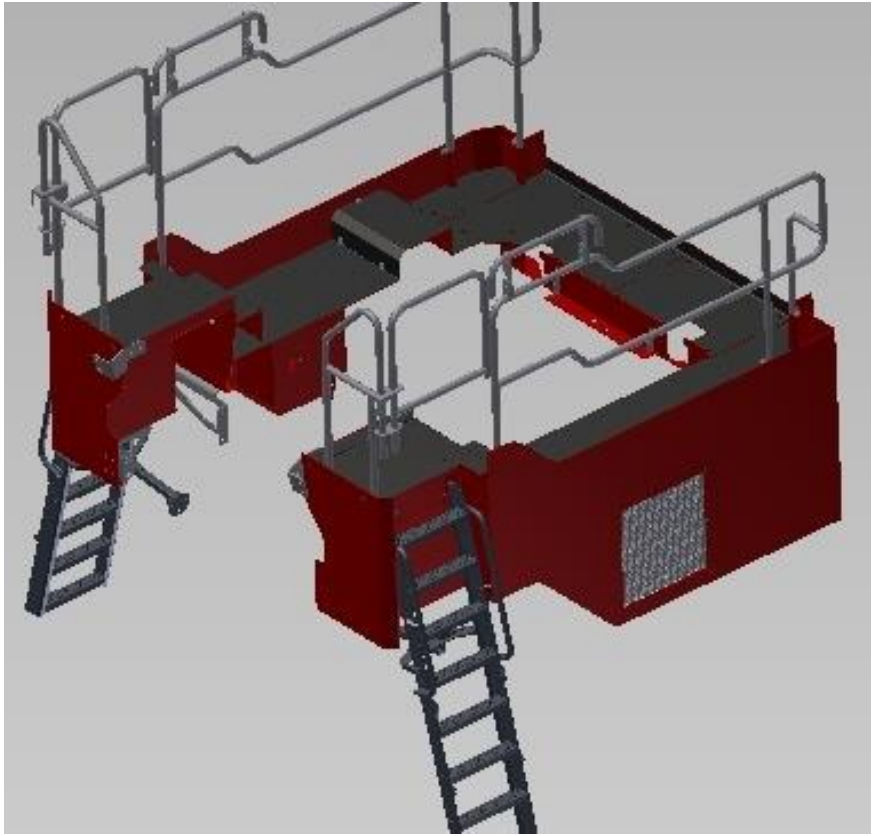

QJ241

MAIN CONVEYOR

- 800mm / 31½” wide belt
- 3444m / 11’ 3⅝” discharge height
- Hydraulically lowers to clear steel (head drum 1634mm / 5’ 3” from ground level fully lowered)
- Lowered from the PLC or optional remote control
- Easy maintenance and access when lowered
- Can be operated in a lower position to increase clearances
- Magnet can operate as close as 250mm / 10” from the belt and provide a clearance of 1050mm / 42” fully lowered

QJ241

MAIN CONVEYOR

- The conveyor is now curved to drastically increase the clearance within the machine
- Lowest point is now 420mm / 16”
- Chassis tunnel to reduce catch points

QJ241

MAIN CONVEYOR

- Better belt support provides more efficiency and additional power to drive the belt
- Belt fully supported with low friction liners
- Design allows for operation without skirt rubbers beyond the feed boot resulting in less maintenance and spillage related issues
- Spray bar as standard
- The tail end of conveyor retains its huge jaw to belt clearance regardless of operating angle. (Unique feature)
- Impact bed directly below the crusher discharge to take the impact of larger material and reduce the risk of belt damage
- New improved belt scraper
- Wheel on the inside of the belt to monitor belt speed

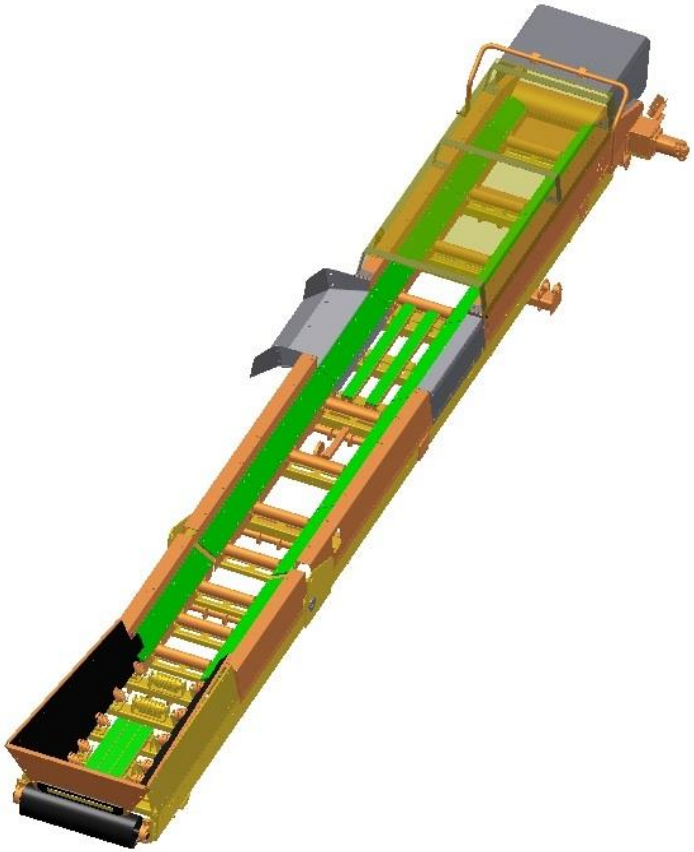

QJ241

MAIN CONVEYOR TAIL SECTION

- The tail section of the main conveyor raises up automatically when tracking mode is selected
- This gives a much greater ground clearance protecting the tail drum and bearings

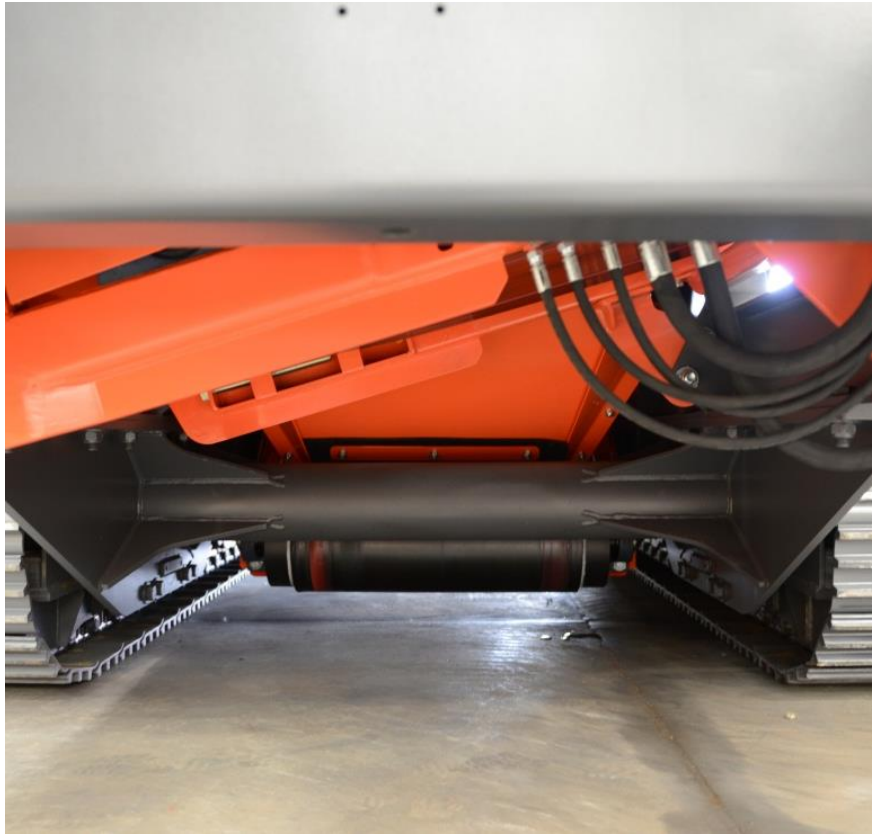

QJ241

DUST SUPPRESSION

- Dust suppression fitted as standard
- Spray bars are located:
  - Below the jaw crusher just after the material has been crushed
  - At the discharge end of the main conveyor

QJ241

ENGINE

- Powered by a Caterpillar C7.1 Acert Stage 3A / Tier 3 or optional C7.1 Acert Stage 3B /Tier 4i engine
- Stage 4 / Tier 4 final introduction during 2015 to replace Stage 3B/Tier 4i engines
- Developing 168kW / 225hp
- The engine complies with all current global emission laws
- Easy access for maintenance via gull wing side door and doors on both ends of the canopy
- 50°C ambient capability (engine and hydraulics)

SANDVIK

QJ241

HYDRAULIC TANK

- 660 litre / 174 US Gal hydraulic tank
- Multi-stage filtration system
- All filters are easily accessed for maintenance
- Inspection covers to ease maintenance
- Low oil level protection
- Over temperature protection

QJ241

FUEL TANK

- 660 litre / 174 US Gal fuel tank
- Mounted at the front of the machine for easy refuelling access
- Optical diesel level gauge
- PLC diesel level gauge
- Heavy duty industrial size filler cap

QJ241

GROUND LEVEL DRAINAGE

- Ground level drainage ports are fitted to the machine to allow easy access when draining fluids from the machine

QJ241

HYDRAULIC COMPONENTS

- Direct driven Danfoss hydraulic pumps with improved efficiency
- Powers the crusher and track drives
- Danfoss control system with steel piping to give maintenance free sealing, improved heat dissipation and greater durability
- Easy access for maintenance at ground level

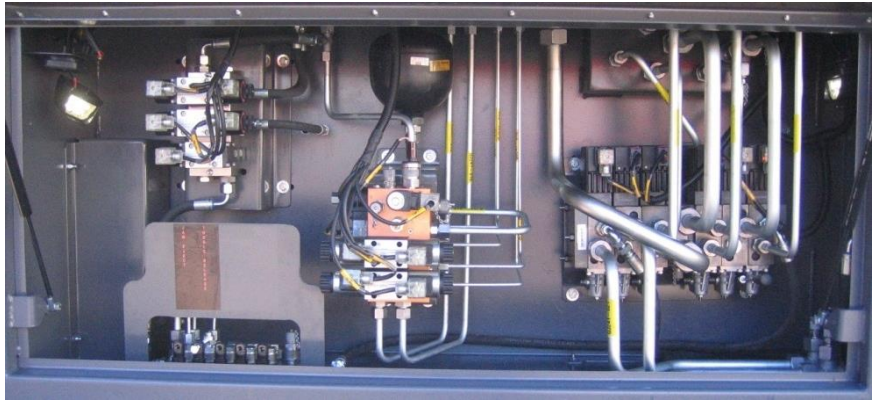

QJ241

MANUAL CONTROL LEVERS

- The hydraulic control levers enable a quick set-up time for the plant
- These functions include at the rear of the plant:
  - Folding hopper sides and rear
  - Folding natural fines conveyor (option)
  - In the hydraulic cabinet
  - Jaw eject
  - Toggle release

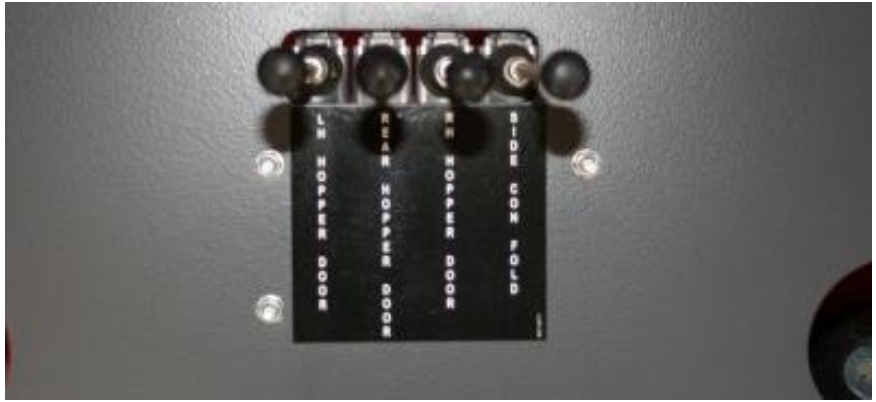

QJ241

CONTROL PANEL

- Simple and reliable PLC control system with Danfoss colour display
- The control panel and all of the hydraulic solenoids are powered by a 24 volts system
- I/O diagnostics to ease trouble shooting

QJ241

CABINET

- The cabinet for the control panel is sealed to prevent damage from dust and moisture (IP54)
- User friendly control panel using icons for ease of use
- Automatic or manual start available (operators choice)

QJ241

TRACKS

- Hydraulically driven crawler track mounted for full site mobility
- The full power of the engine is available for driving the tracks when needed
- Centre length of 3310mm / 10’ 10½”
- Track shoe width 400mm / 15½”
- Speed 0-1.1 km/h / 0-0.68 mph

QJ241

CONTROL FUNCTION

- Tracking controlled by wired umbilical controller
- Full proportional control
- Variable speed for ease of loading and on site mobility
- Spare battery and on plant charger
- Optional radio control available for tracking

Radio controller (optional)

Umbilical controller

Battery charger (supplied with radio controller)

QJ241

OPTIONAL RADIO CONTROL

- Crusher CSS can be set using the handset control.
- Feeder stop / start and feeder speed can be adjusted via the radio handset
- Jog mode can be operated from the hand set to clear a blocked crusher
- The main conveyor can be lowered via the handset to clear rebar blockages

QJ241

TRANSPORT DIMENSIONS

Transport length	13.9m / 45’ 7 ⅜”
Transport width	2.64m / 8’ 7 ⅞”
Transport height	3.22m / 10’ 6 ⅝”
Standard weight	32,568kgs / 71,800lbs

QJ241

TRANSPORT DRAWINGS

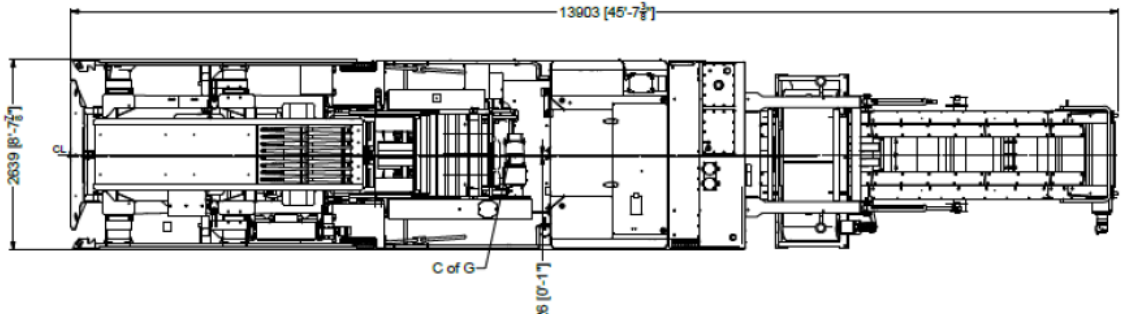

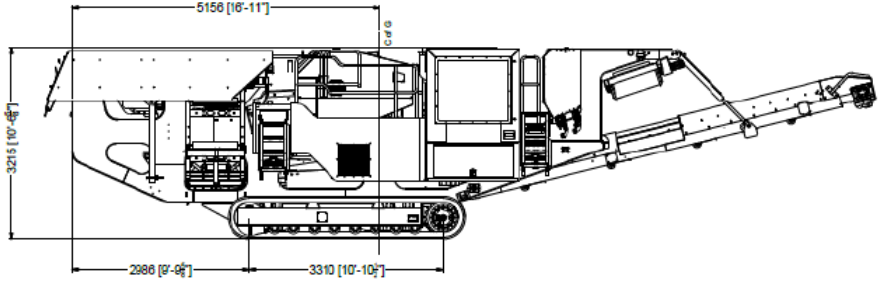

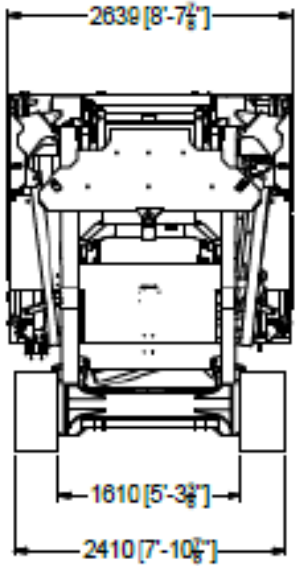

QJ241

WORKING DIMENSIONS

Working length	13.74m / 45’ 1”
Working width	3.23m / 10’ 7¼” (standard)
Working height	3.86m / 12’ 7⅞”
Standard weight	32,568kg / 71,800lbs

QJ241

WORKING DRAWINGS

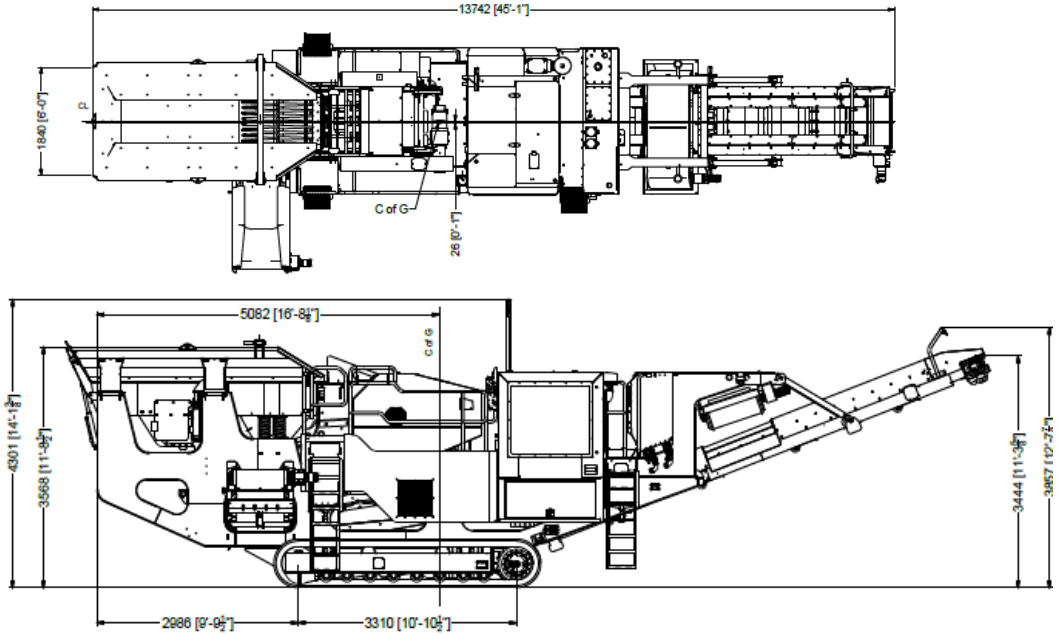

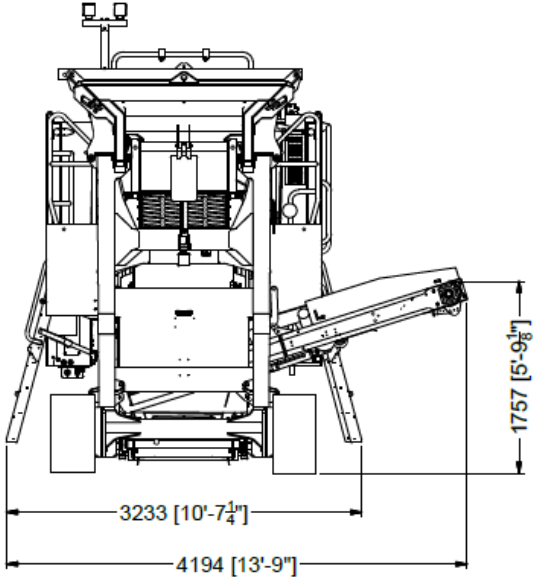

Natural fines conveyor and overband magnet shown are optional

QJ241

NOISE EMISSIONS

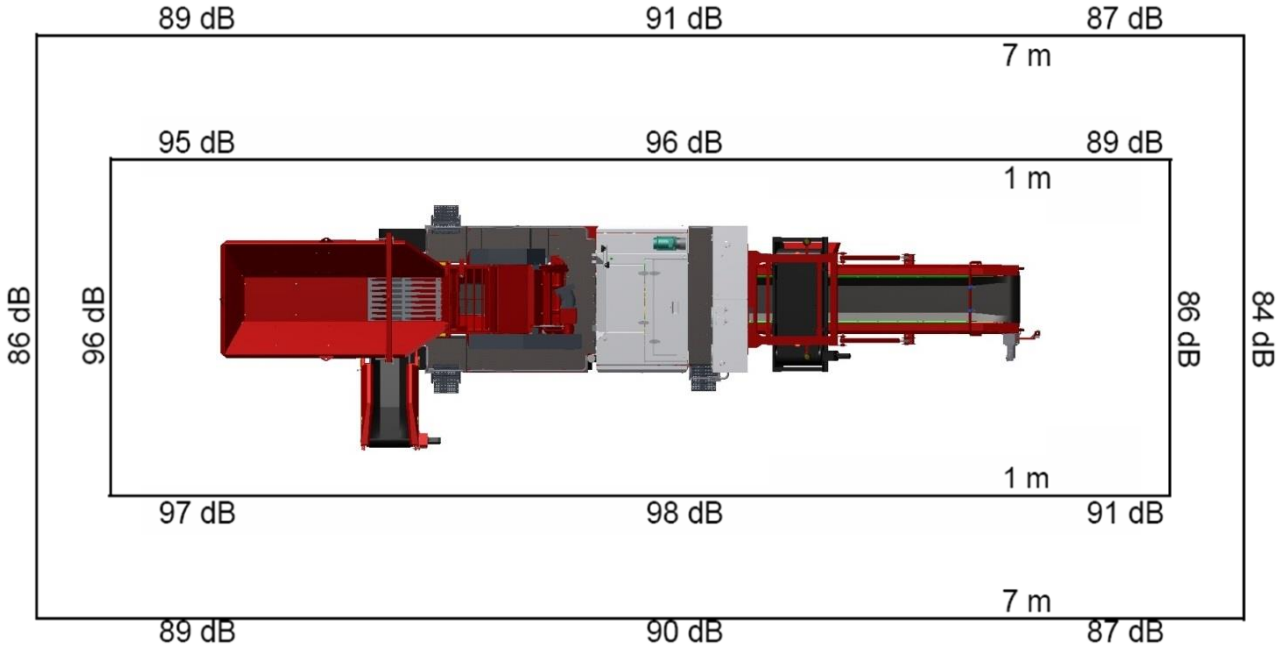

QJ241

STANDARD FEATURES

- Hydraulically folding hopper complete with liner plates
- Stepped grizzly feeder (35-70mm spacing)
- Sandvik single toggle jaw c/w 13% Mn corrugated jaw plates
- Hydraulically lowering 800mm wide main conveyor
- Dust suppression spray bars
- Proportional tracking via wired umbilical controller
- CAT C7.1 Acert stage 3A / Tier 3 engine
- Automatic greasing to the jaw crusher and torque arm only
- 50ºC ambient capability
- Reversible crushing action to relieve blockages
- Steel pipework for better heat dissipation
- Hydraulically driven cooling fan with auto reverse to back flush dust from the radiator (Stage 3B only)

SANDVIK

QJ241

AVAILABLE OPTIONS

- Wear resistant hopper liner plates back & sides
- Wear resistant feeder pan liner
- Belt protection plate under jaw crusher discharge
- Central autolube (all bearings)
- Water pump (hydraulic)
- Arctic package -20ºC/-4ºF (32 grade hydraulic oil & engine oil)
- Arctic package -30ºC/-22ºF (arctic hydraulic oil, engine oil, webasto coolant heater & grease)
- Intelligent line multi machine communication (2 or 3 machines)
- Pull stop cords on the main and natural fines conveyor
- Main conveyor level sensor (stockpile monitor)
- Remote diesel pump (electric)
- Main conveyor dust cover
- Lighting mast & cabinet lights
- Engine filter kit - 250 hours (air & oil filters - for 3A engine only)
- Plant & engine filter kit - 500 hours (3A engine)
- Plant & engine filter kit - 500 hours (3B & 4 Final engine)
- Overband magnet
- Natural fines conveyor
- Jaw level sensor
- Radio remote control
- Head drum guard on main conveyor
- Head drum guard on natural fines conveyor

QJ241

OPTIONAL NATURAL FINES CONVEYOR

- Hydraulically folding Natural Fines conveyor
- 650mm (25½”) belt width
- 1.757m (5’ 9⅛”) discharge height
- Folds out hydraulically to working position from a manual control level
- Folds in hydraulically against the chassis for transportation
- Transport securing pin

QJ241

OPTIONAL MAGNET

- The magnet is designed to separate the steel from the crushed material and then discharge it away from the machine
- Variable speed belt
- The magnet can be lowered or raised depending on the application

QJ241

OPTIONAL JAW LEVEL SENSOR

- A level monitor system above the crusher stops the feeder if the crusher is full
- Automatically speeds up and slows down the feeder
- The controlled feed rate reduces crusher blockages

QJ241

BENEFITS OVERVIEW

- High performing 1000 x 650mm / 40” x 26” jaw with hydraulically adjustable CSS for a variety of applications
- Reverse crushing capability to relieve blockages, crush sticky problematic materials and asphalt
- Raise / lower facility on the main conveyor via radio remote for recycling operations
- Hydraulic drive enabling the reverse crush action and the ability to restart with a full crushing chamber
- Durable steel pipework for better heat dissipation
- Extended main conveyor for massive stockpiling capability

SANDVIK

SANDVIKMOBILES.COM

PRECISION SCREEN

Screening and Crushing Solutions

sales@precisionscreen.com.au
www.precisionscreen.com.au

Australian dealers for Sandvik's range of mobile crushing and screening equipment